Wall Series Presentation Row 3

(WS-PR1C) Spec Sheet

The Presentation Row 3 holds 3 standard 750 ml wine bottles.

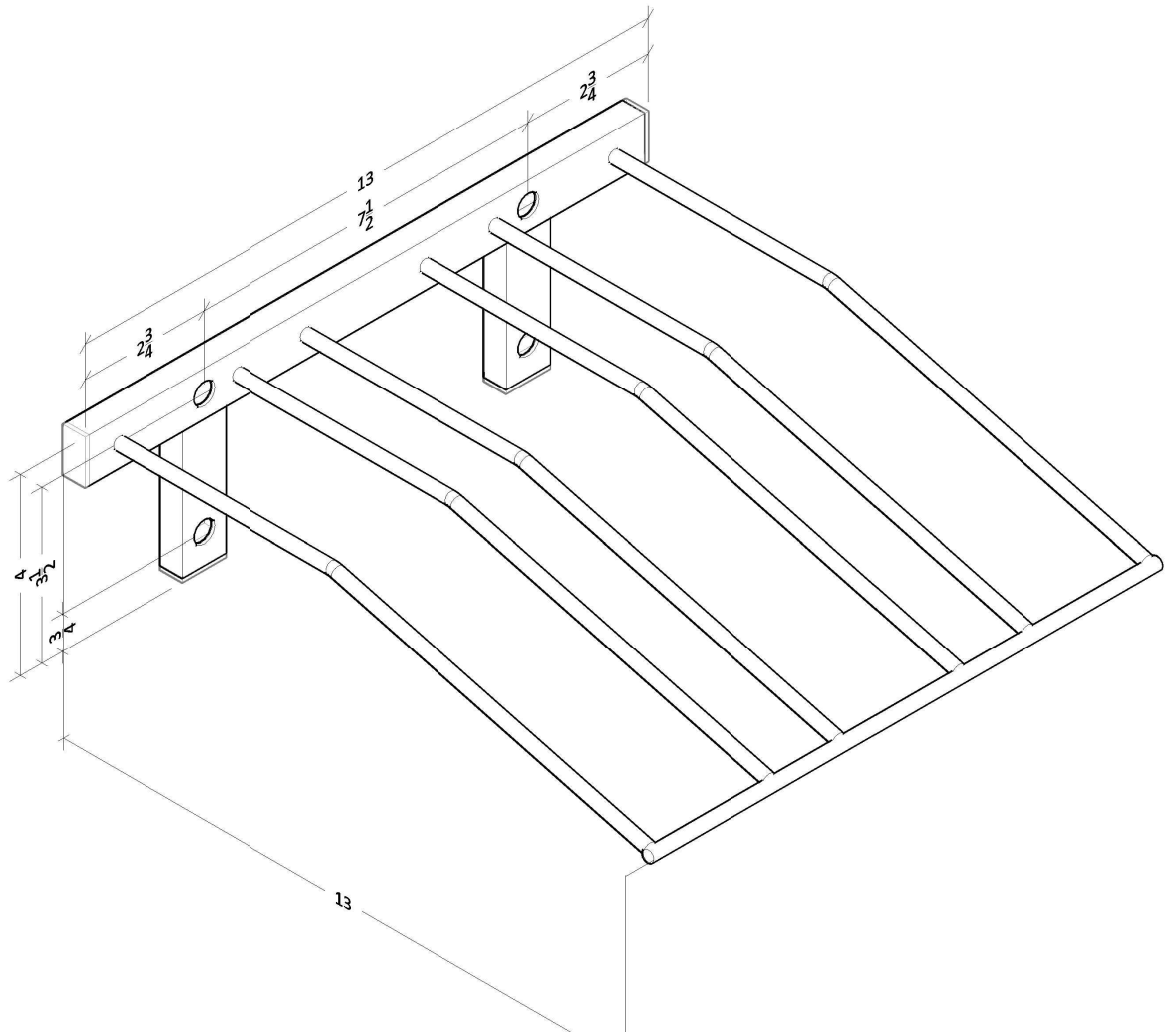

VINTAGEVIEW®
MOVING WINE STORAGE FORWARD

10645 E 47th Ave, Denver, CO 80239 | phone: 866.650.1500 | fax: 866.650.1501 | VintageView.com

For product warranty information, please visit vintageview.com/warranty